TSA-120 Extender ED 1.5x System Chart

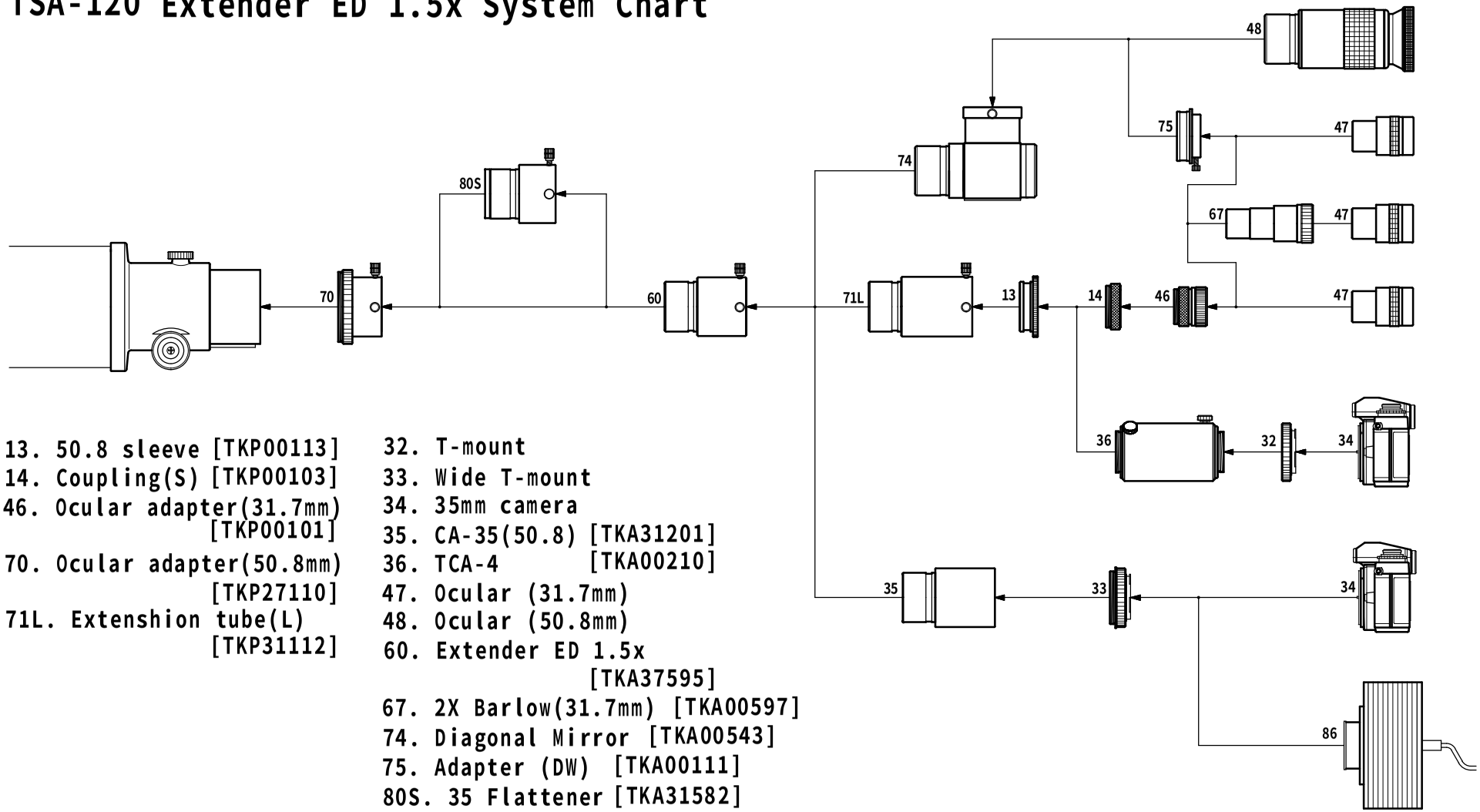

13. 50.8 sleeve [TKP00113]
14. Coupling(S) [TKP00103]
46. Ocular adapter(31.7mm) [TKP00101]
70. Ocular adapter(50.8mm) [TKP27110]
71L. Extenshion tube(L) [TKP31112]

32. T-mount
33. Wide T-mount
34. 35mm camera
35. CA-35(50.8) [TKA31201]
36. TCA-4 [TKA00210]
47. Ocular (31.7mm)
48. Ocular (50.8mm)
60. Extender ED 1.5x [TKA37595]
67. 2X Barlow(31.7mm) [TKA00597]
74. Diagonal Mirror [TKA00543]
75. Adapter (DW) [TKA00111]
80S. 35 Flattener [TKA31582]
86. CCD camera